法蘭口球閥 FLANGE BALL VALVE F2K-10K

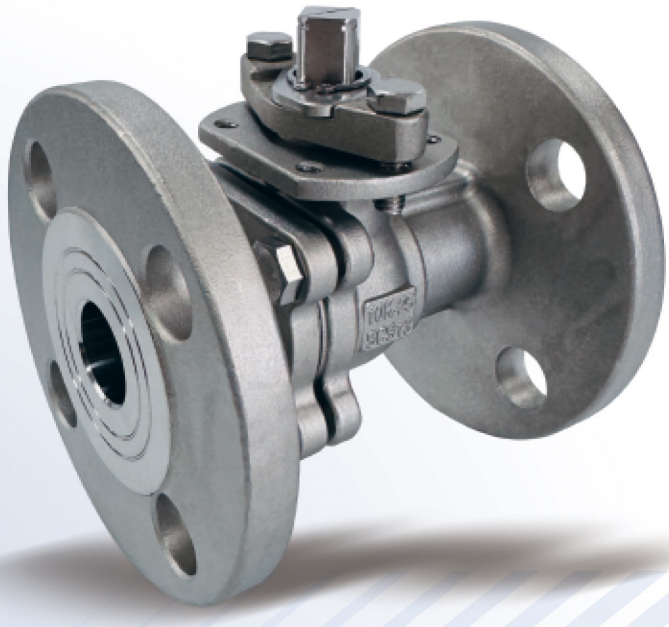

SPECIFICATIONS

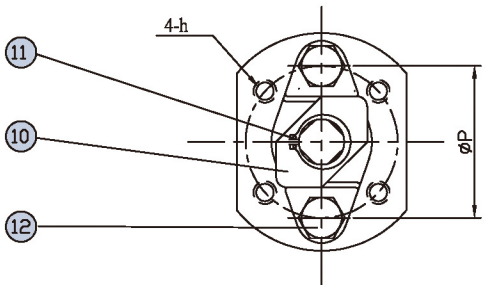

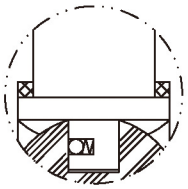

A VIEW

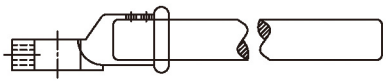

HANDLE FOR 5" & 8"

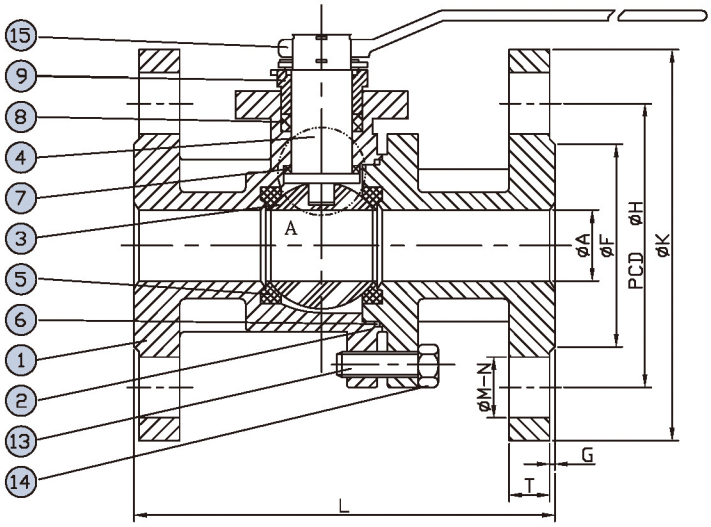

MATERIAL LIST

NO	PART NAME	MATERIAL		QTY
		STAINLESS STEEL	CARBON STEEL	
1	BODY	ASTM A351 Gr.CF8M	ASTM A216 WCB	1
2	CAP	ASTM A351 Gr.CF8M	ASTM A216 WCB	1
3	BALL	ASTM A351 Gr.CF8M	ASTM A351 CF8M	1
4	STEM	ASTM A276 Gr.316	ASTM A276 Gr.304	1
5	SEAT	PTFE	PTFE	2
6	GASKET	PTFE	PTFE	1
7	THRUST WASHER	PTFE	PTFE	1
8	PACKING	PTFE	PTFE	1
9	GLAND	ASTM A351 Gr.CF8	ASTM A351 Gr.CF8	1
10	STOPPER	S.S.304	S.S.304	1
11	SNAP RING	S.S.304	S.S.304	1
12	GLAND BOLT	ASTM A193 Gr.B8	ASTM A193 Gr.B7	2
13	BOLT	ASTM A193 Gr.B8	ASTM A193 Gr.B7	4-10
14	HANDLE	ASTM A536 Gr.65-45-12	ASTM A536 Gr.65-45-12	1

DIMENSIONS

SIZE	A	L	F	G	H	K	T	M	N	P	h
1/2"	15	110.0	51.0	1	70	95	12	15	4	42	M5 X P0.8
3/4"	20	120.0	56.0	1	75	100	14	15	4	42	M5 X P0.8
1"	25	130.0	67.0	1	90	125	14	19	4	50	M6 X P1.0
11/4"	32	140.0	76.0	2	100	135	16	19	4	50	M6 X P1.0
11/2"	38	165.0	81.0	2	105	140	16	19	4	70	M8 X P1.25
2"	50	180.0	96.0	2	120	155	16	19	4	70	M8 X P1.25
21/2"	65	191.0	116.0	2	140	175	18	19	4	70	M8 X P1.25
3"	80	200.0	126.0	2	150	185	18	19	8	102	M10 X P1.5
4"	100	230.0	151.0	2	175	210	18	19	8	102	M10 X P1.5
5"	125	300.0	182.0	2	210	250	20	23	8	125	M12 X P1.75
6"	150	340.0	212.0	2	240	280	22	23	8	125	M12 X P1.75
8"	200	457.0	262.0	2	290	330	22	23	12	140	M16 X P2.0