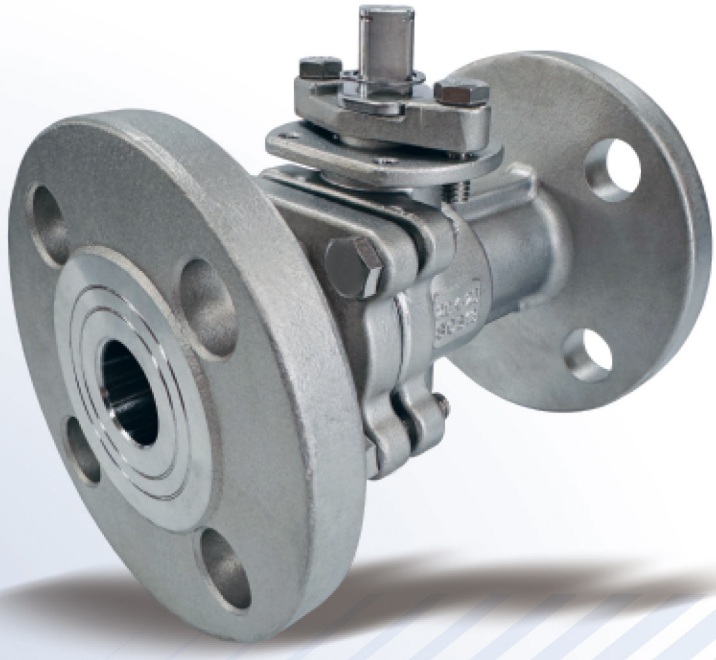

SPECIFICATIONS

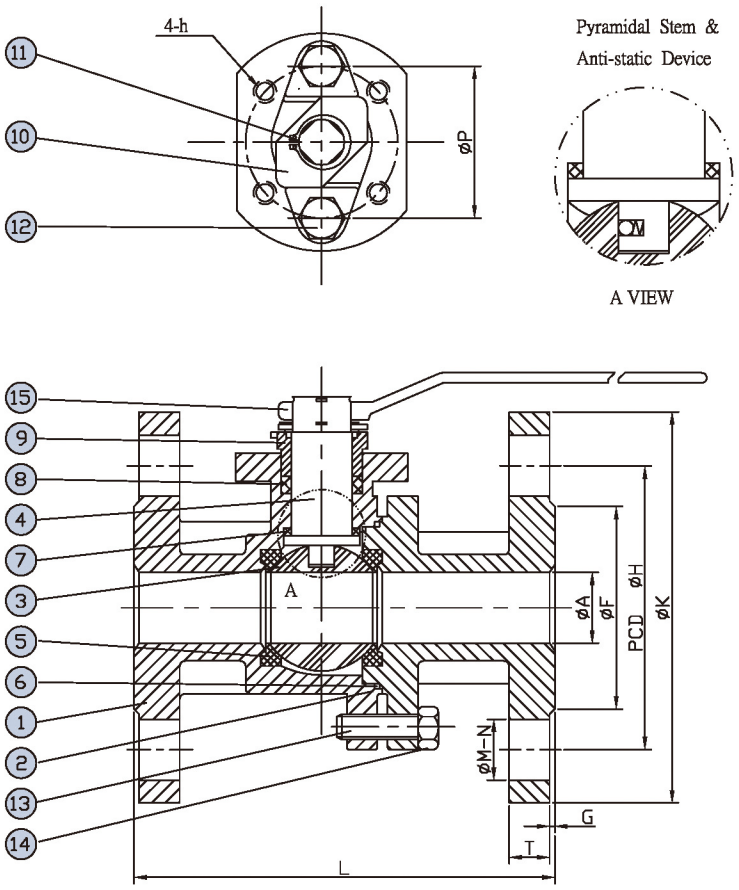

MATERIAL LIST

NO	PART NAME	MATERIAL		QTY
		STAINLESS STEEL	CARBON STEEL	
1	BODY	ASTM A351 Gr.CF8M	ASTM A216 WCB	1
2	CAP	ASTM A351 Gr.CF8M	ASTM A216 WCB	1
3	BALL	ASTM A351 Gr.CF8M	ASTM A351 CF8M	1
4	STEM	ASTM A276 Gr.316	ASTM A276 Gr.304	1
5	SEAT	PTFE	PTFE	2
6	GASKET	PTFE	PTFE	1
7	THRUST WASHER	PTFE	PTFE	1
8	PACKING	PTFE	PTFE	1
9	GLAND	ASTM A351 Gr.CF8	ASTM A351 Gr.CF8	1
10	STOPPER	S.S.304	S.S.304	1
11	SNAP RING	S.S.304	S.S.304	1
12	GLAND BOLT	ASTM A193 Gr.B8	ASTM A193 Gr.B7	2
13	BOLT	ASTM A193 Gr.B8	ASTM A193 Gr.B7	4-8
14	HANDLE	ASTM A536 Gr.65-45-12	ASTM A536 Gr.65-45-12	1

DIMENSIONS

SIZE	A	L	F	G	H	K	T	M	N	P	h
1/2"	15	140.0	51.0	1	70	95	14	15	4	42	M5 X P0.8
3/4"	20	152.0	56.0	1	75	100	16	15	4	42	M5 X P0.8
1"	25	165.0	67.0	1	90	125	16	19	4	50	M6 X P1.0
11/2"	38	190.0	85.0	2	105	140	18	19	4	70	M8 X P1.25
2"	50	216.0	96.0	2	120	155	18	19	8	70	M8 X P1.25
21/2"	65	241.0	116.0	2	140	175	20	19	8	102	M10 X P1.5
3"	80	283.0	132.0	2	160	200	22	23	8	102	M10 X P1.5
4"	100	305.0	160.0	2	185	225	24	23	8	102	M10 X P1.5