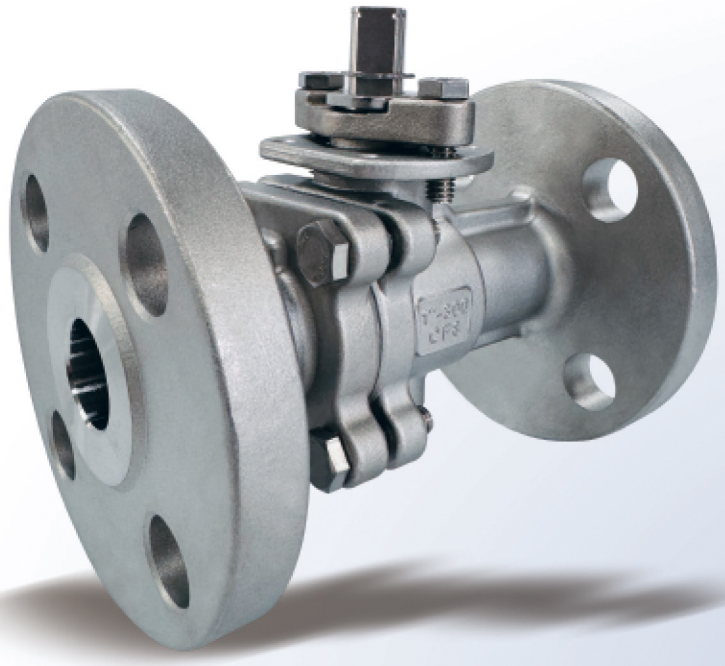

SPECIFICATIONS

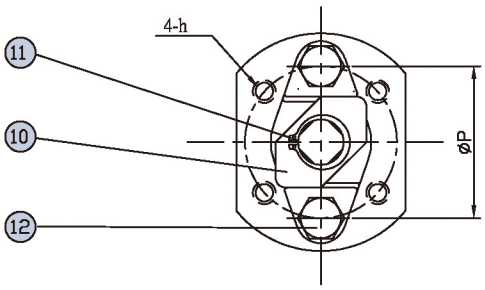

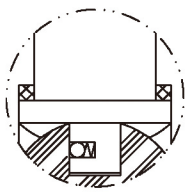

A VIEW

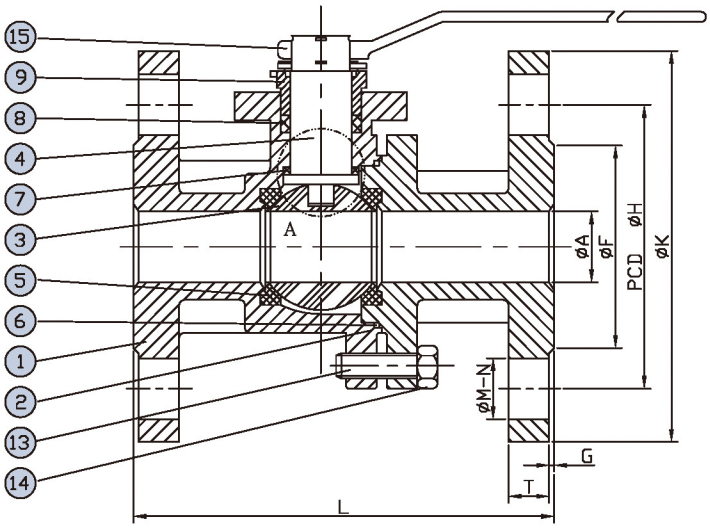

MATERIAL LIST

NO	PART NAME	MATERIAL		QTY
		STAINLESS STEEL	CARBON STEEL	
1	BODY	ASTM A351 Gr.CF8M	ASTM A216 WCB	1
2	CAP	ASTM A351 Gr.CF8M	ASTM A216 WCB	1
3	BALL	ASTM A351 Gr.CF8M	ASTM A351 CF8M	1
4	STEM	ASTM A276 Gr.316	ASTM A276 Gr.304	1
5	SEAT	PTFE	PTFE	2
6	GASKET	PTFE	PTFE	1
7	THRUST WASHER	PTFE	PTFE	1
8	PACKING	PTFE	PTFE	1
9	GLAND	ASTM A351 Gr.CF8	ASTM A351 Gr.CF8	1
10	STOPPER	S.S.304	S.S.304	1
11	SNAP RING	S.S.304	S.S.304	1
12	GLAND BOLT	ASTM A193 Gr.B8	ASTM A193 Gr.B7	2
13	BOLT	ASTM A193 Gr.B8	ASTM A193 Gr.B7	4-8
14	HANDLE	ASTM A536 Gr.65-45-12	ASTM A536 Gr.65-45-12	1

DIMENSIONS

SIZE	A	L	F	G	H	K	T	M	N	P	h
1/2"	15	140.0	35.0	1.6	66.7	95	14.3	15.9	4	42	M5 X P0.8
3/4"	20	152.0	43.0	1.6	82.6	117	15.9	19	4	42	M5 X P0.8
1"	25	165.0	51.0	1.6	88.9	124	17.5	19	4	50	M6 X P1.0
11/2"	38	190.0	73.0	1.6	114.3	155.5	20.6	22	4	70	M8 X P1.25
2"	50	216.0	92.0	1.6	127.0	165.1	22.2	19	8	70	M8 X P1.25
21/2"	65	241.0	104.6	1.6	149.3	190.5	25.4	22	8	102	M10 X P1.5
3"	80	283.0	127.0	1.6	168.1	209.5	28.6	22	8	102	M10 X P1.5
4"	100	305.0	157.2	1.6	200.1	254.0	31.8	22	8	102	M10 X P1.5