

SPECIFICATIONS

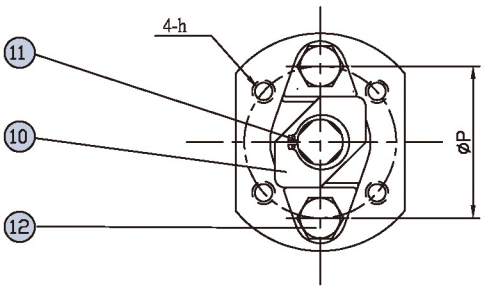

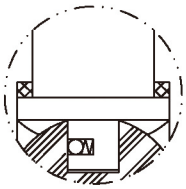

A VIEW

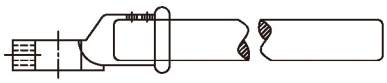

HANDLE FOR 5" & 8"

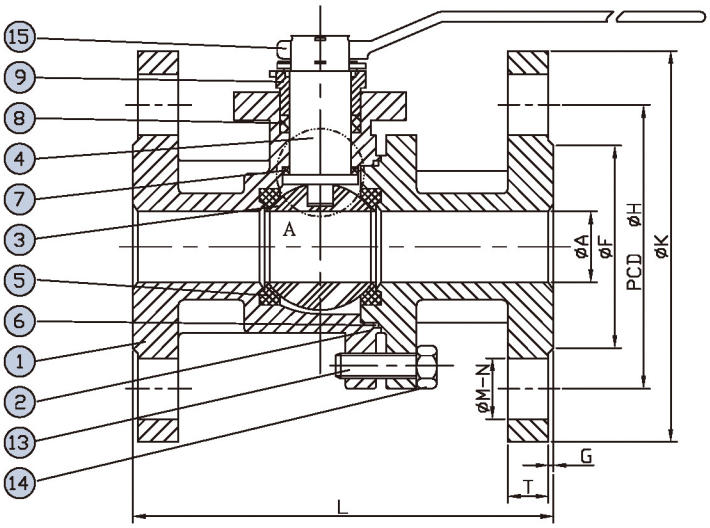

MATERIAL LIST

NO	PART NAME	MATERIAL		QTY
		STAINLESS STEEL	CARBON STEEL	
1	BODY	ASTM A351 Gr.CF8M	ASTM A216 WCB	1
2	CAP	ASTM A351 Gr.CF8M	ASTM A216 WCB	1
3	BALL	ASTM A351 Gr.CF8M	ASTM A351 CF8M	1
4	STEM	ASTM A276 Gr.316	ASTM A276 Gr.304	1
5	SEAT	PTFE	PTFE	2
6	GASKET	PTFE	PTFE	1
7	THRUST WASHER	PTFE	PTFE	1
8	PACKING	PTFE	PTFE	1
9	GLAND	ASTM A351 Gr.CF8	ASTM A351 Gr.CF8	1
10	STOPPER	S.S.304	S.S.304	1
11	SNAP RING	S.S.304	S.S.304	1
12	GLAND BOLT	ASTM A193 Gr.B8	ASTM A193 Gr.B7	2
13	BOLT	ASTM A193 Gr.B8	ASTM A193 Gr.B7	4-12
14	HANDLE	ASTM A536 Gr.65-45-12	ASTM A536 Gr.65-45-12	1

DIMENSIONS

SIZE	A	L	F	G	H	K	T	M	N	P	h
1/2"	15	108.0	35.0	1.6	60.5	89.0	11.1	15.9	4	42	M5 X P0.8
3/4"	20	117.5	43.0	1.6	69.8	98.0	11.1	15.9	4	42	M5 X P0.8
1"	25	127.0	51.0	1.6	79.4	108.0	11.1	15.9	4	50	M6 X P1.0
11/4"	32	139.4	64.0	1.6	88.9	117.0	12.7	15.9	4	50	M6 X P1.0
11/2"	38	165.1	73.0	1.6	98.5	127.0	14.3	16.0	4	70	M8 X P1.25
2"	50	177.8	92.0	1.6	120.6	152.4	15.9	19.0	4	70	M8 X P1.25
21/2"	65	190.5	104.6	1.6	139.7	177.8	17.5	19.0	4	70	M8 X P1.25
3"	80	203.2	127.0	1.6	152.4	190.5	19.1	19.0	4	102	M10 X P1.5
4"	100	228.6	157.2	1.6	190.5	228.6	23.8	19.0	8	102	M10 X P1.5
5"	125	356.0	186.0	1.6	215.9	254.0	23.8	22.0	8	125	M12 X P1.75
6"	150	394.0	215.9	1.6	241.3	279.4	25.4	22.0	8	125	M12 X P1.75
8"	200	457.2	269.8	1.6	298.4	342.9	28.5	22.0	8	140	M16 X P2.0